RENAULT

CMLTB X84

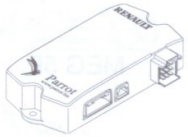

PI020067

82 00 624 048

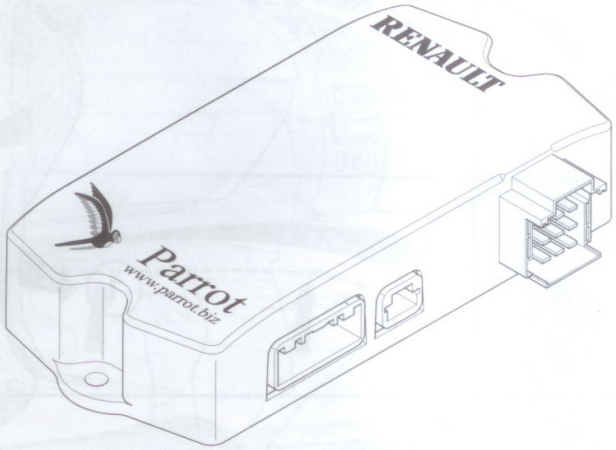

77.11.419.311
77.11.419.313
77.11.419.315

F	Instructions de montage	H	Felszerelési utasítás
D	Einbauanleitung	P	Instruções de montagem
GB	Fitting instructions	PL	Instrukcje wbudowania
NL	Inbouwhandleiding	ESP	Instrucciones de montaje
GR	Οδηγίεζ συναρμολόγησηζ	SWE	Montageanvisning
I	Instruzioni di montaggio	SLO	Navodila za instalacijo
CZ	Pokyny pro montáž	TUR	Montaj talimatlari

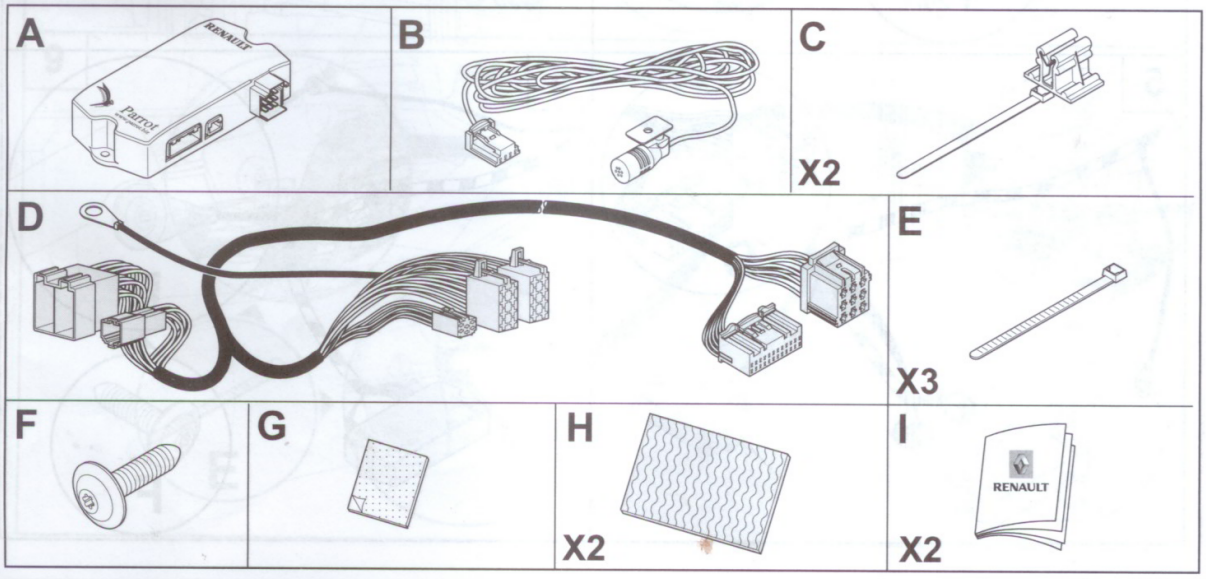

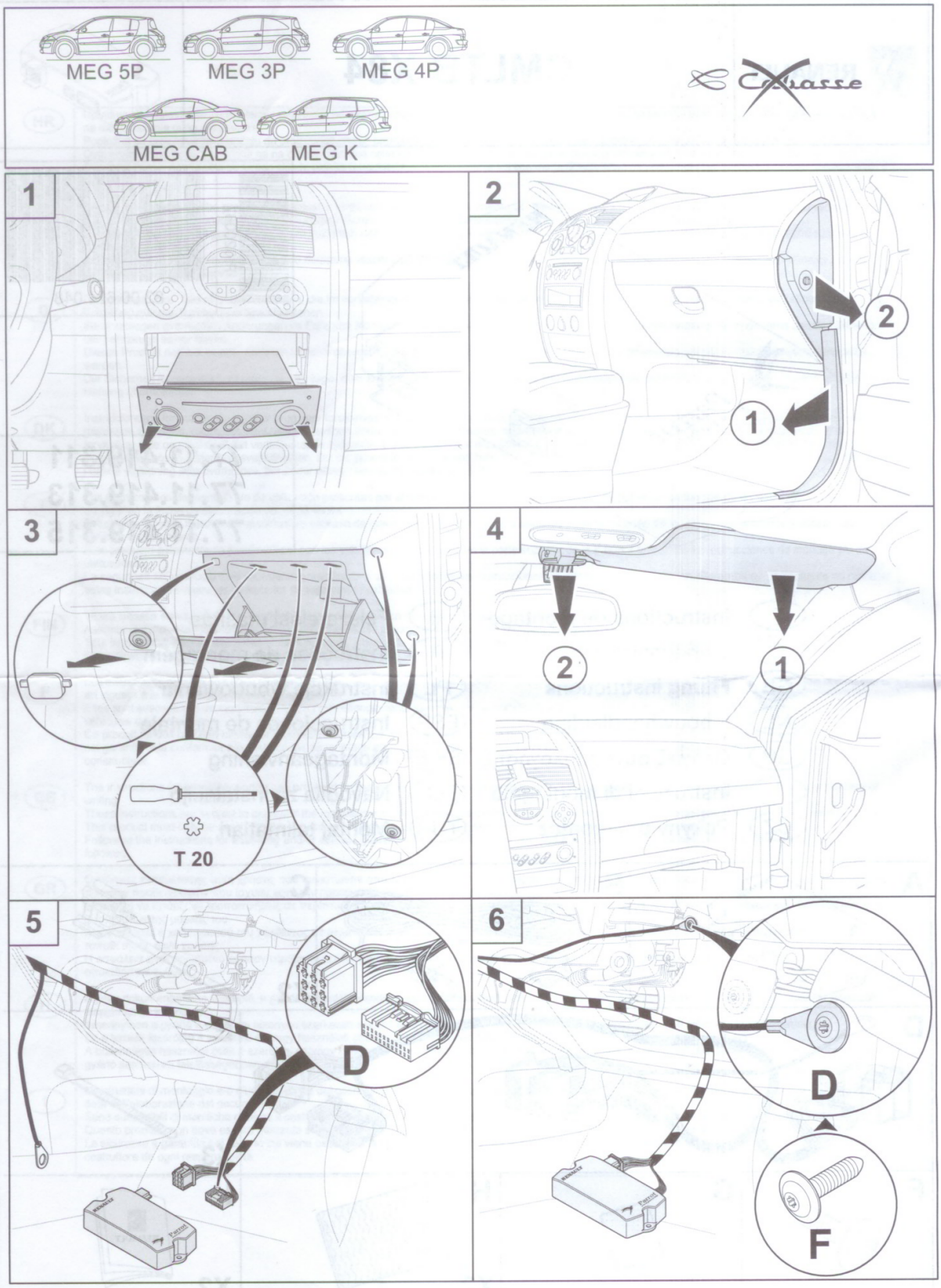
MEG 5P
MEG 3P
MEG 4P
MEG CAB
MEG K
1
2
2
1
3
T 20
4
2
1
5
D
6
D
F

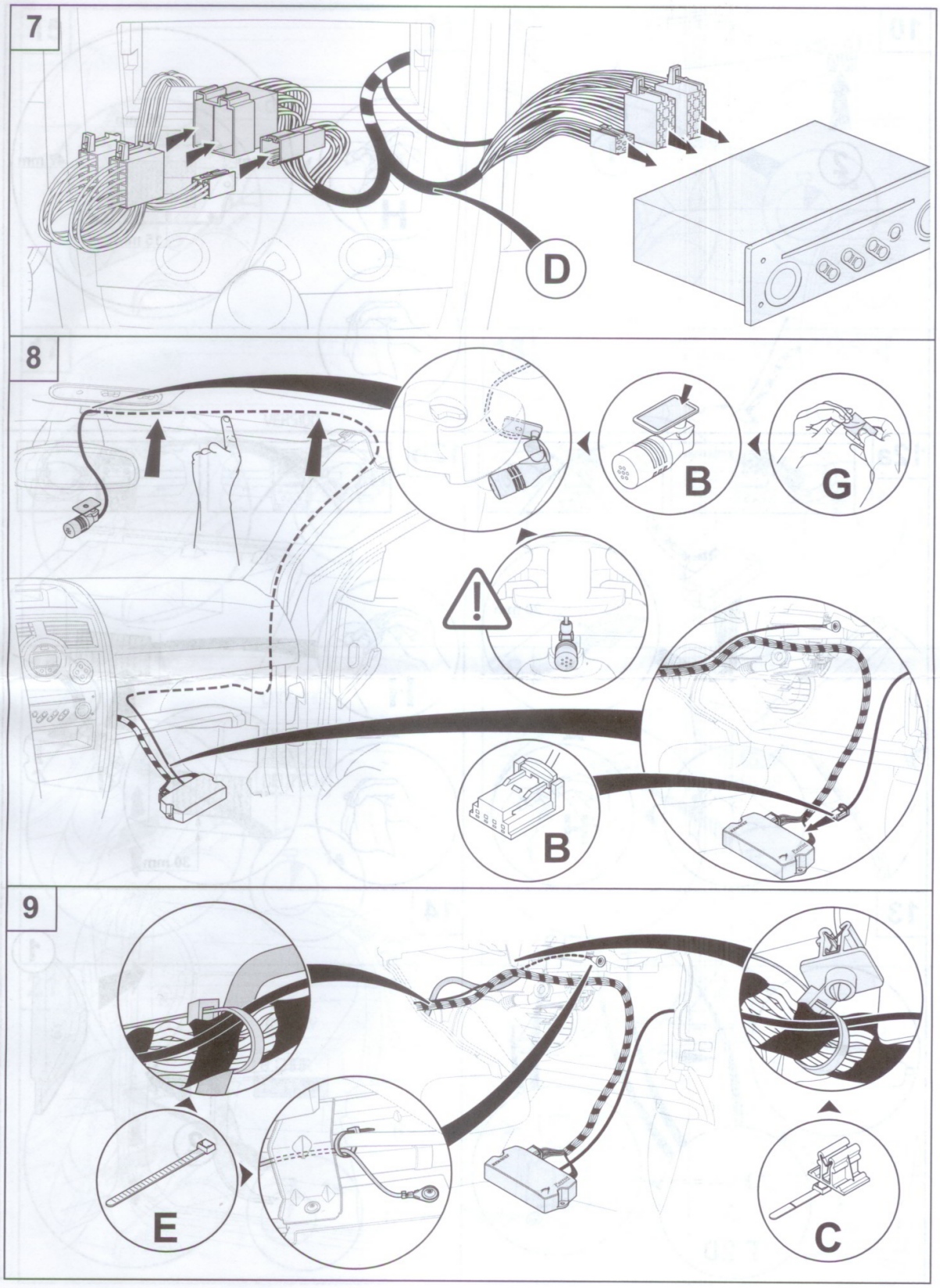
7
D
8
B
G
B
9
E
C

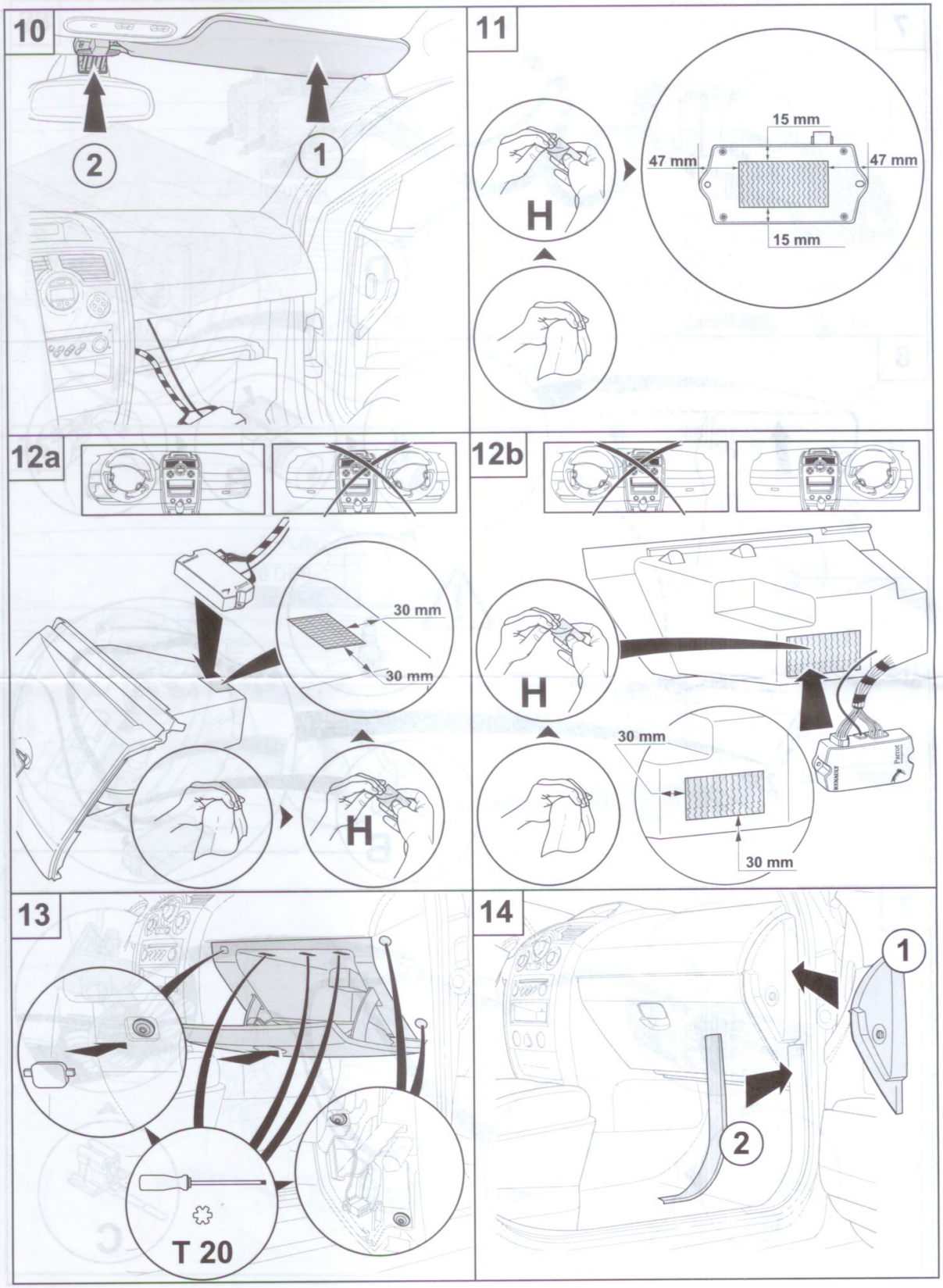
10
2
1
11
H
15 mm
47 mm
47 mm
15 mm
12a
30 mm
30 mm
H
12b
H
30 mm
30 mm
13
T 20
14
1
2

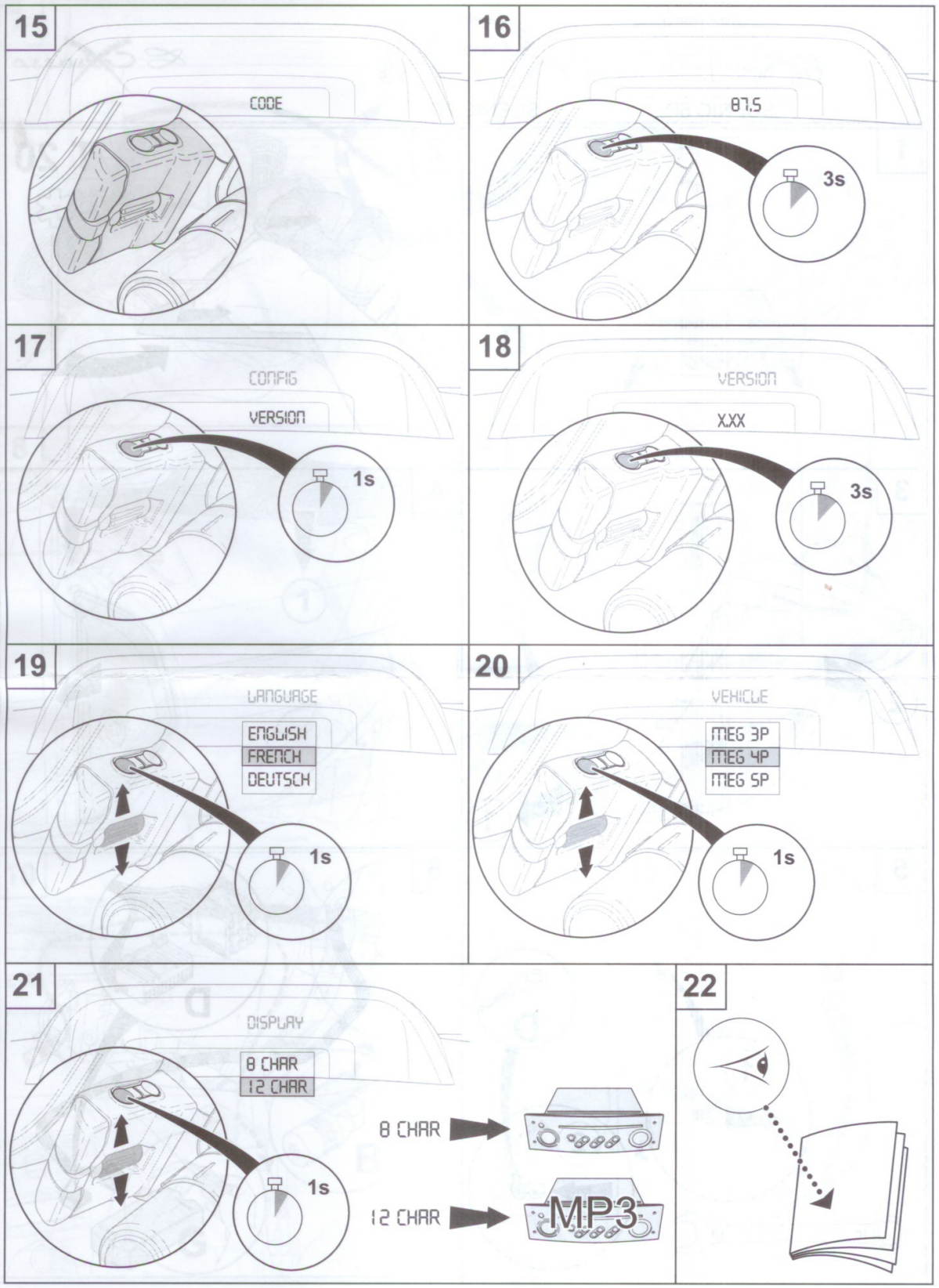
15
CODE
16
87.5
3s
17
CONFIG
VERSION
1s
18
VERSION
X.XX
3s
19
LANGUAGE
ENGLISH
FRENCH
DEUTSCH
1s
20
VEHICLE
MEG 3P
MEG 4P
MEG 5P
1s
21
DISPLAY
8 CHAR
12 CHAR
1s
8 CHAR
12 CHAR
MP3
22

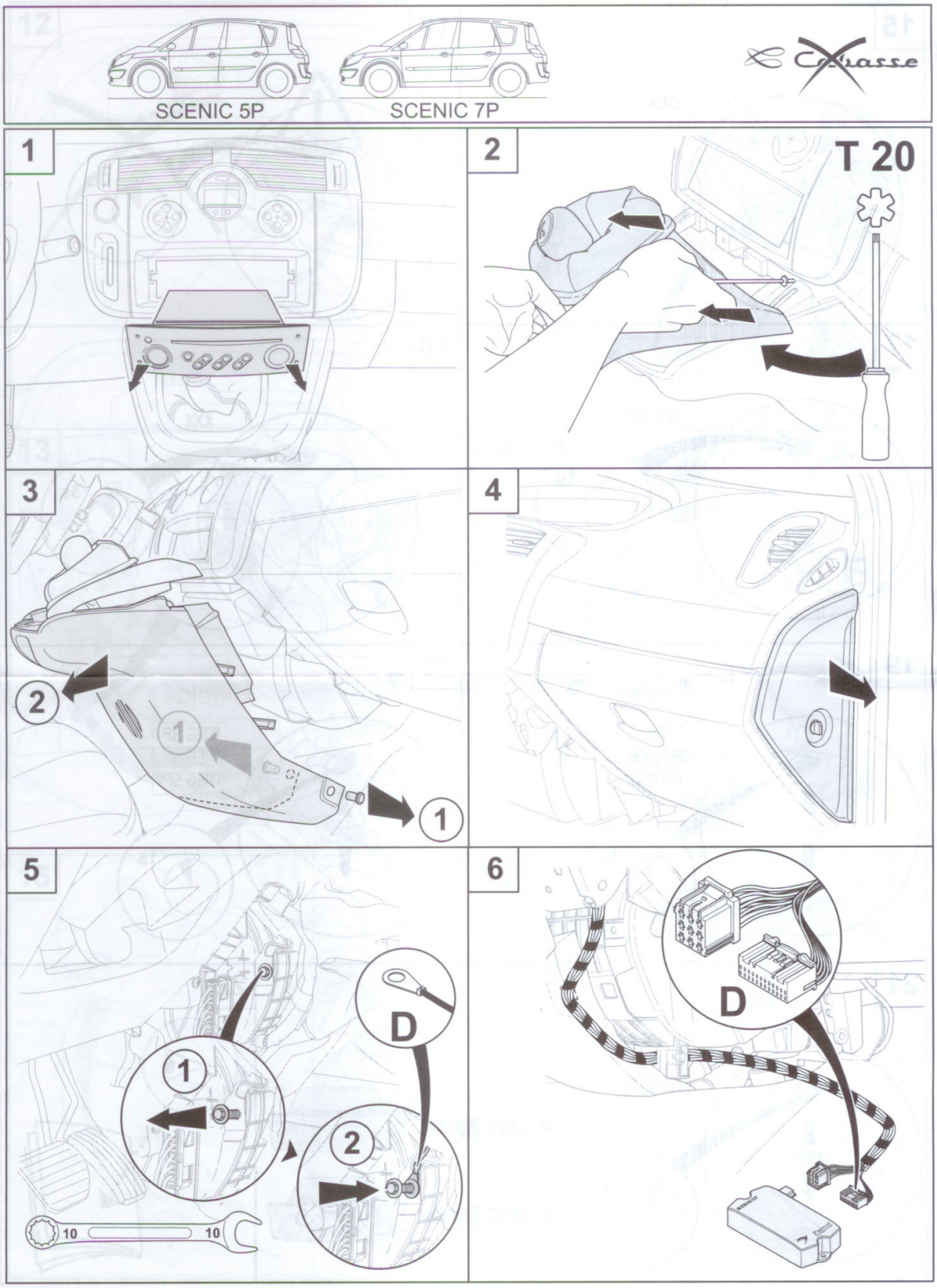
SCENIC 5P
SCENIC 7P
1
2
T 20
3
2
1
1
4
5
1
2
D
10
10
6
D

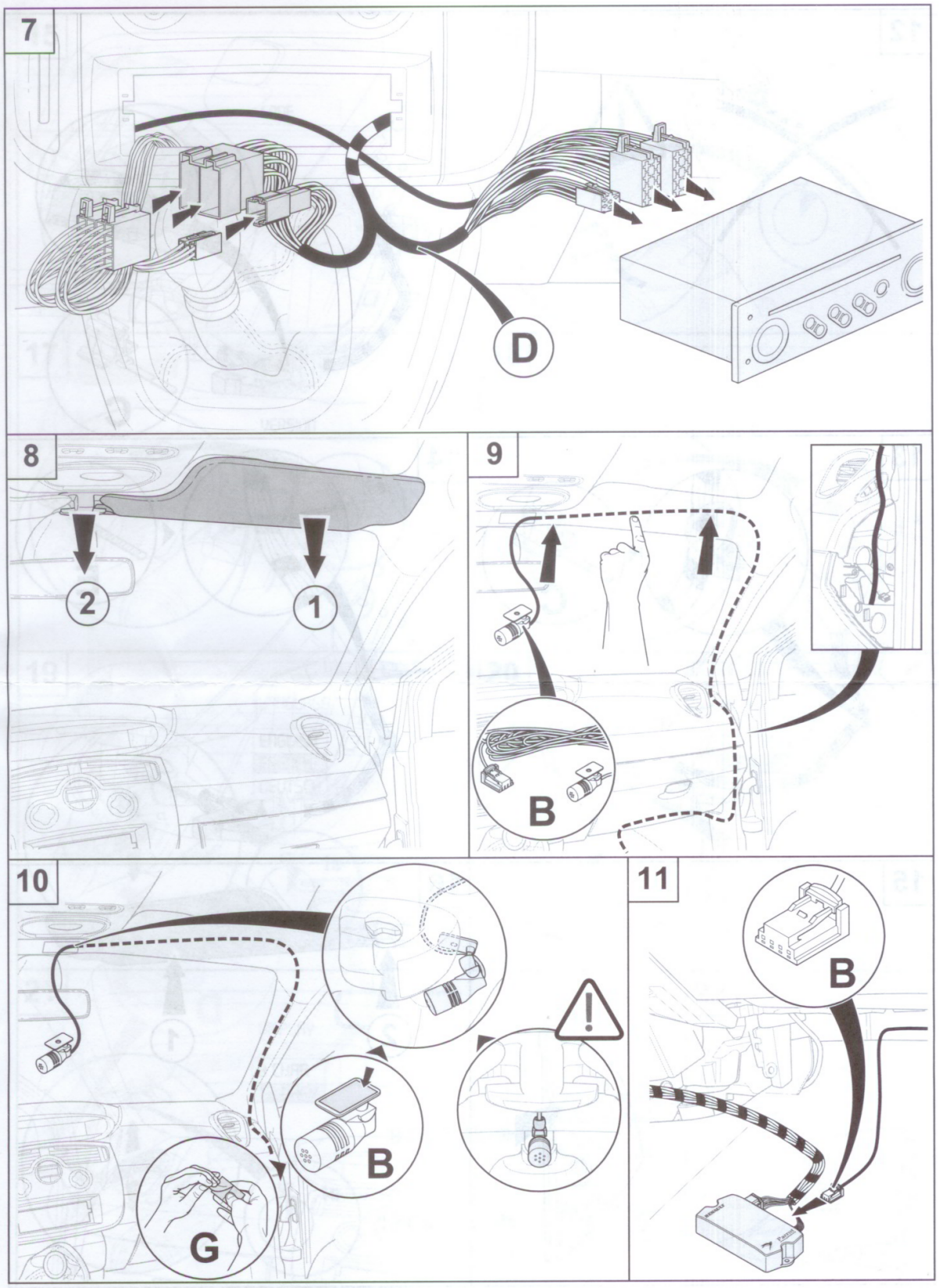
7
D
8
2
1
9
B
10
B
G
11
B

12

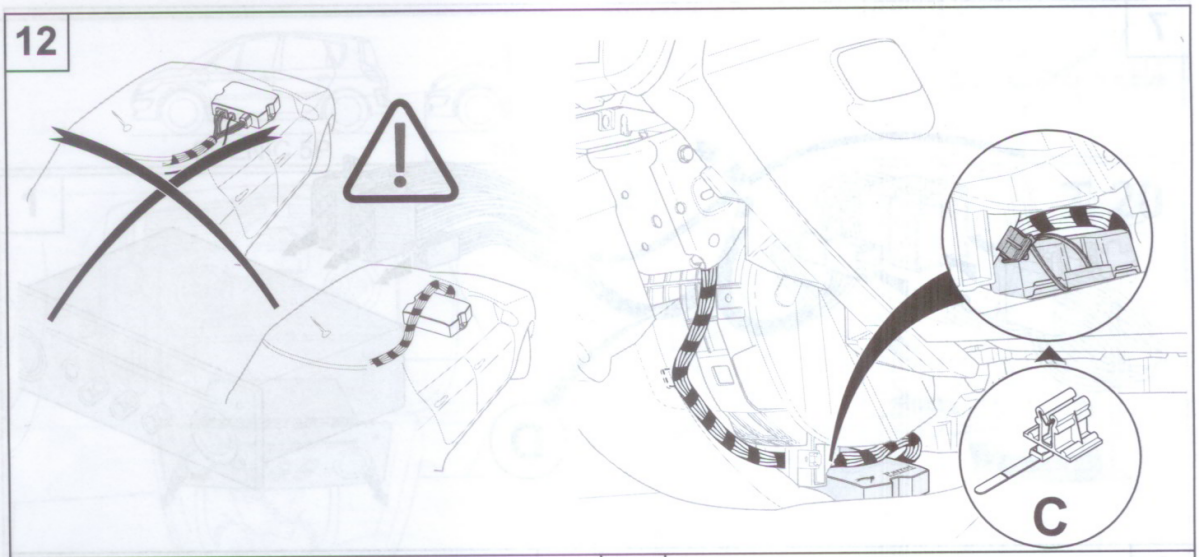

13

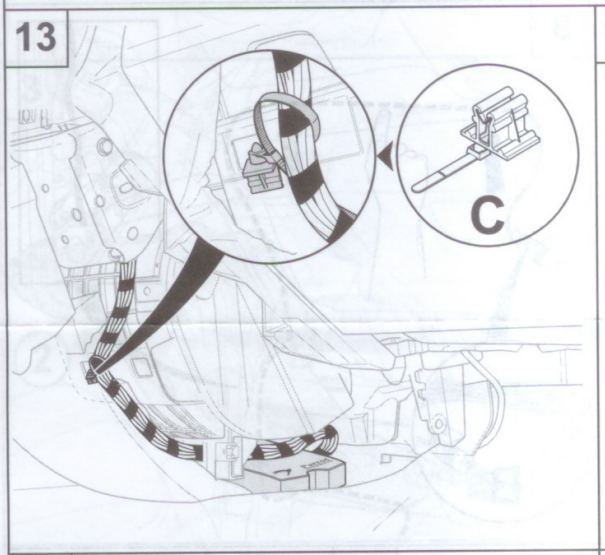

14

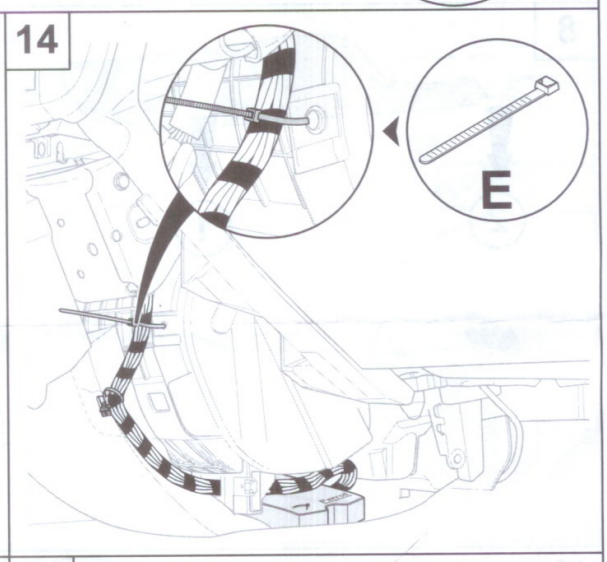

15

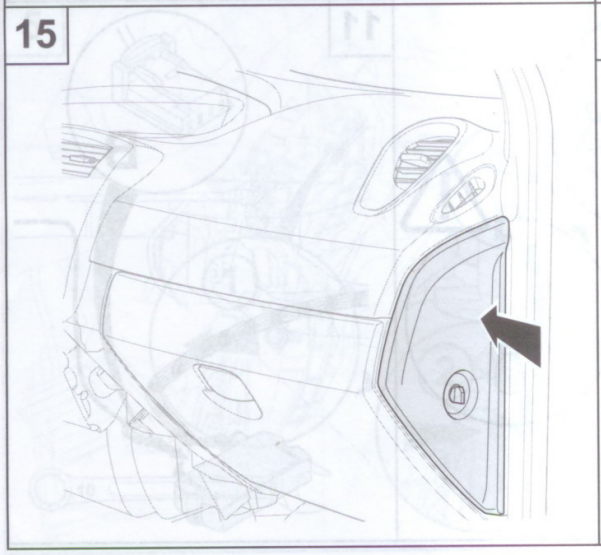

16

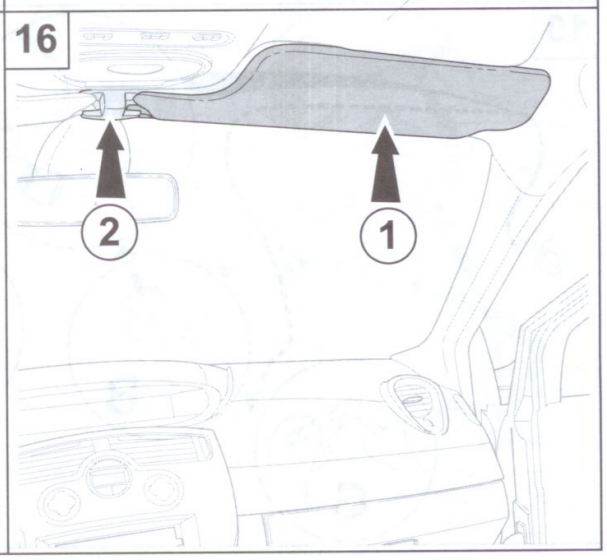

17

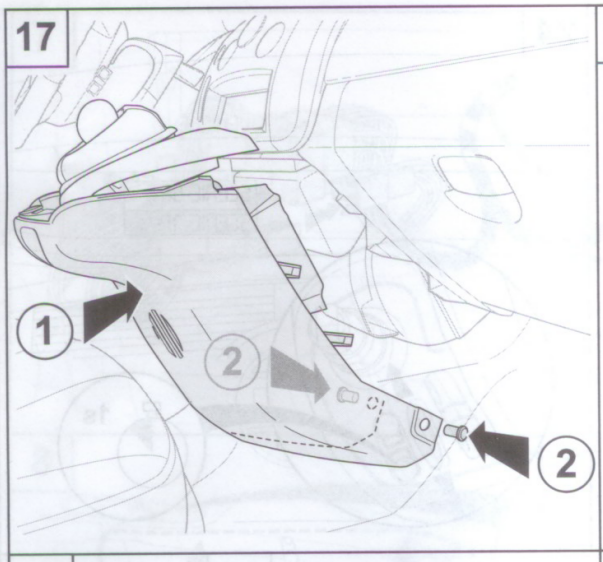

18

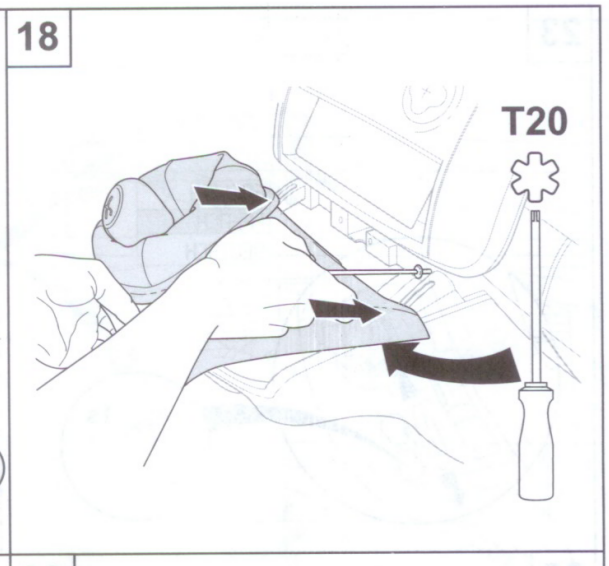

19

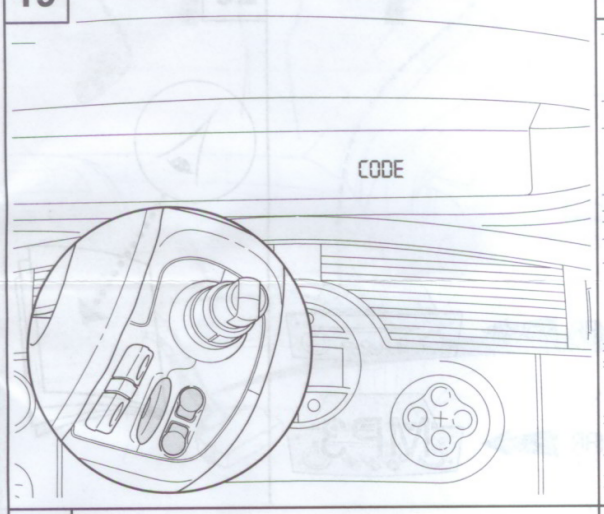

20

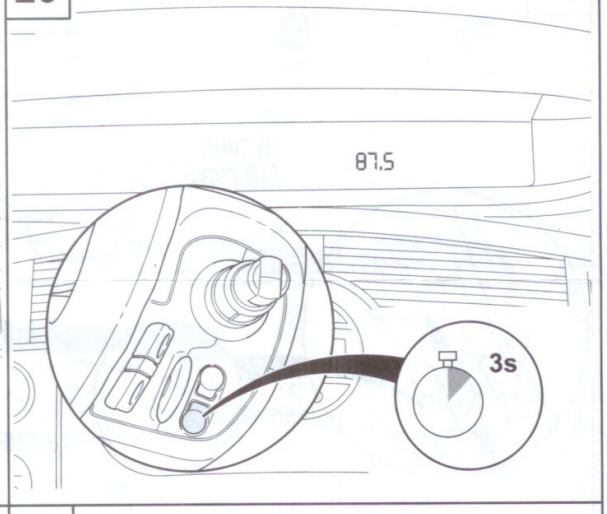

21

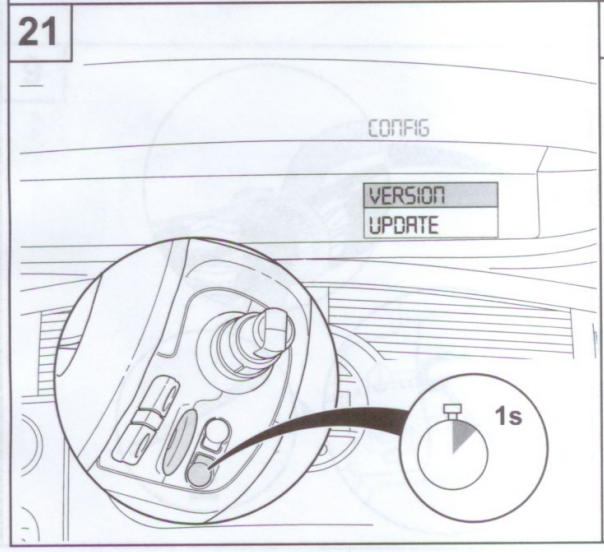

22

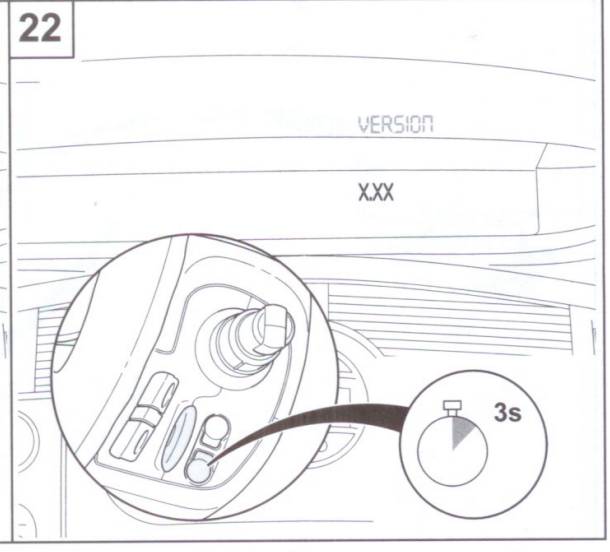

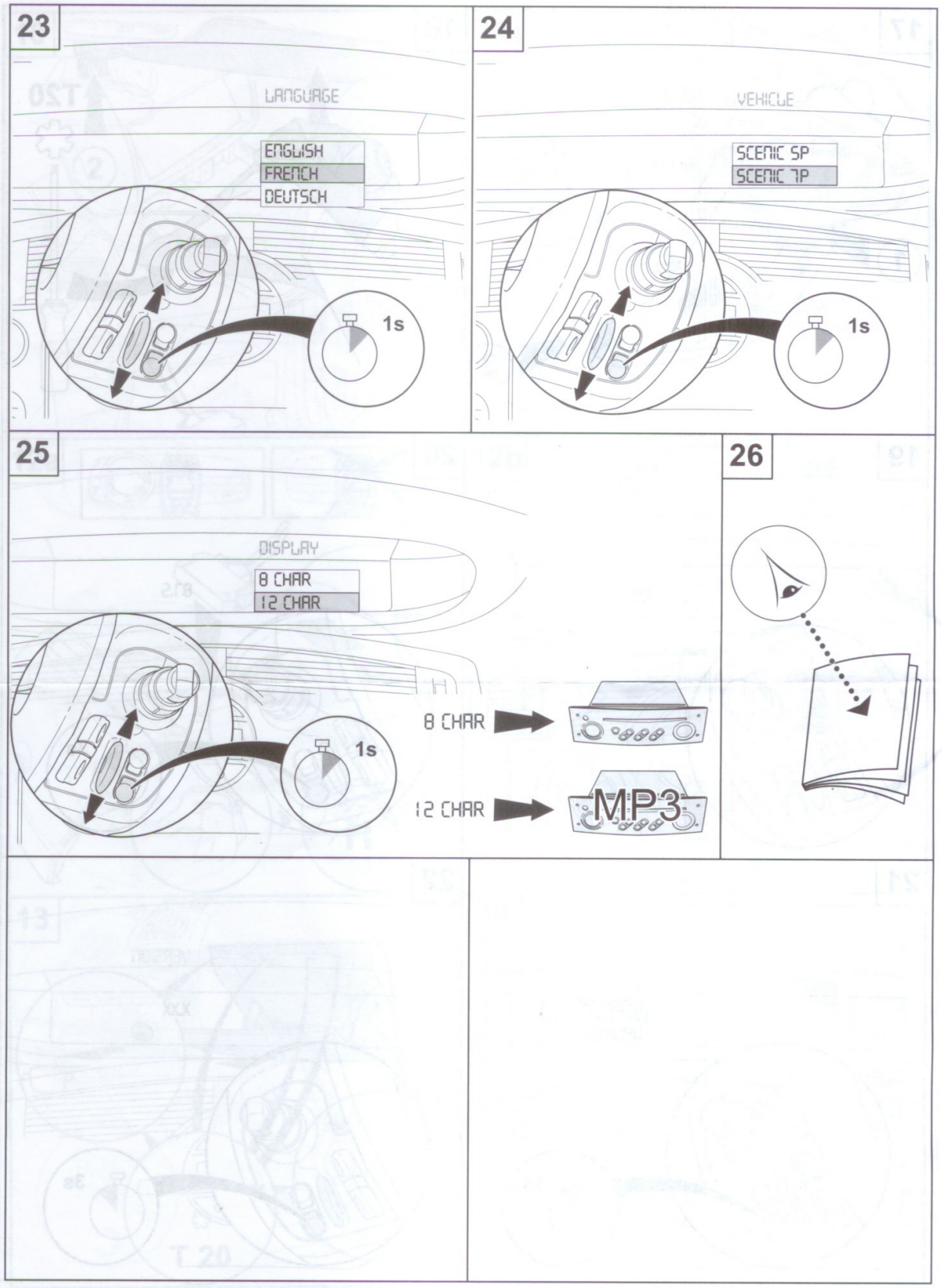
23
LANGUAGE
ENGLISH
FRENCH
DEUTSCH
1s
24
VEHICLE
SCENIC SP
SCENIC 7P
1s
25
DISPLAY
8 CHAR
12 CHAR
1s
8 CHAR
12 CHAR
MP3
26